MICRO SWITCH
a Honeywell Division
FED. MFG. CODE 91929

SWITCH-ENCLOSED

CATALOG LISTING
1HE1-6
MILITARY PART NUMBER
M8805/80-01

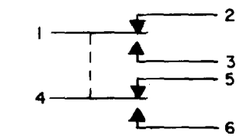

CIRCUIT DIAGRAM

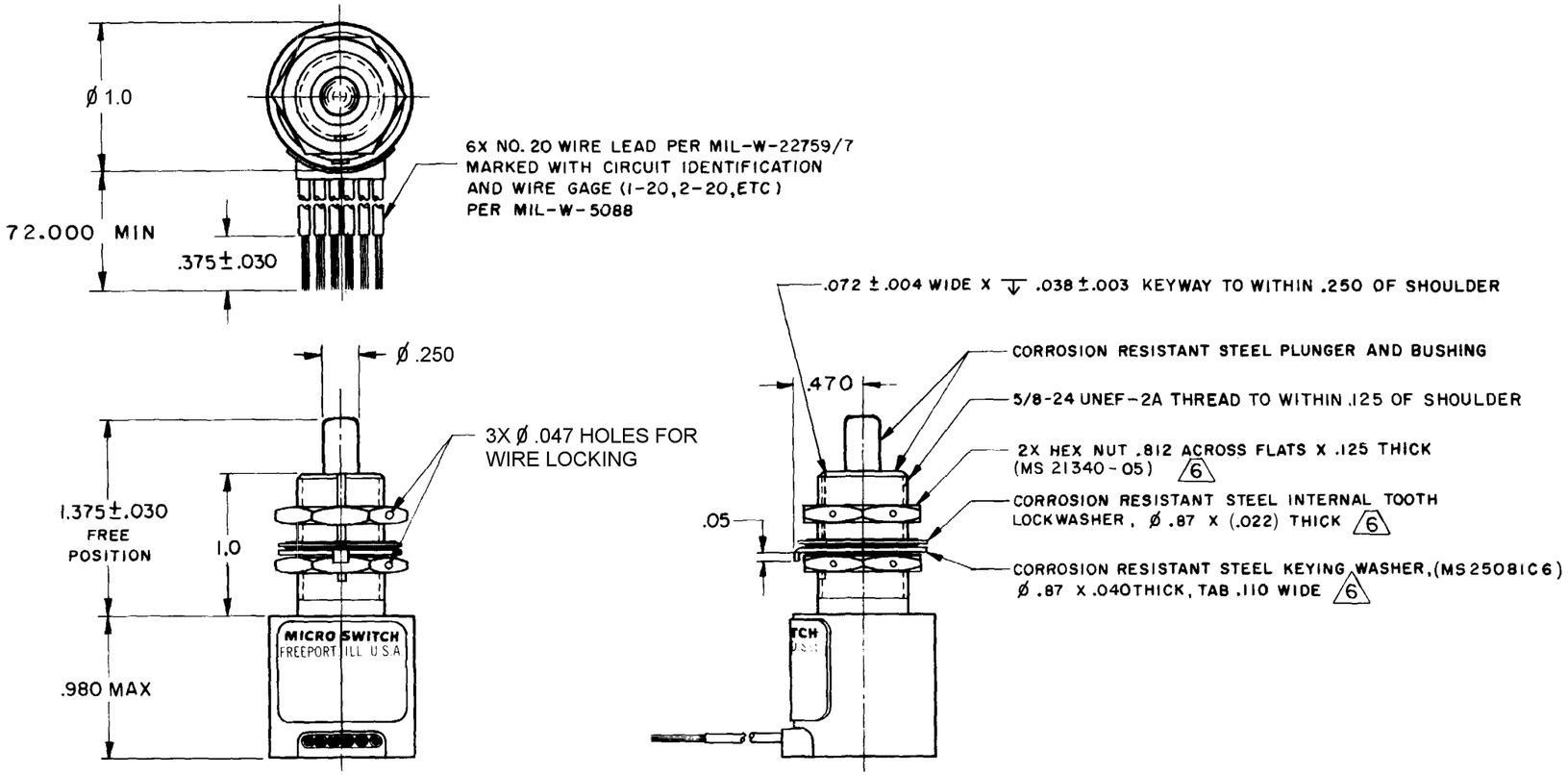

NOTES
1 - ENCLOSURE FINISHED WITH BLUE EPOXY BASED ENAMEL COLOR NO. 25184 PER FEDERAL STANDARD 595
2 - CIRCUIT DIAGRAM CATALOG LISTING AND MILITARY STD. NO. M8805/80-01 ARE SHOWN ON NAMEPLATE
3 - FOR OPERATION IN TEMPERATURES OF -65°F TO +257°F
4 - COINCIDENCE OF OPERATING AND RELEASING POINTS: .010 INCH OF PLUNGER TRAVEL
5 - SWITCH SEALED PER MIL-PRF-8805 SYMBOL 5
6 HARDWARE MAY BE PACKAGED UNASSEMBLED PER MIL-PRF-8805

ANSI Y14.5M-1982 APPLIES

THIS DRAWING COVERS A PROPRIETARY ITEM AND IS THE PROPERTY OF MICRO SWITCH. A DIVISION OF HONEYWELL. THIS DRAWING IS NOT TO BE COPIED OR USED WITHOUT THE APPROVAL OF MICRO SWITCH

THIRD ANGLE PROJECTION

CHARACTERISTICS	
OPERATING FORCE	6-12 LB
FULL OVERTRAVEL FORCE	30 LB MAX
RELEASE FORCE	4 LB MIN
PRETRAVEL	.040 MAX
DIFFERENTIAL TRAVEL	.020 MAX
OVERTRAVEL	.250 MIN

ELECTRICAL DATA

CONTACT ARRANGEMENT
2X SPDT

LOAD	28VDC SEA LEVEL AND 100,000 FT.	
RESISTIVE	5 AMPS	
INDUCTIVE	3 AMPS	
MOTOR	4 AMPS	

SCALE FULL
DO NOT SCALE PRINT

UNLESS OTHERWISE SPECIFIED TOLERANCES ARE

ONE PLACE	(.0)	±.030
TWO PLACE	(.00)	±.015
THREE PLACE	(.000)	±.005
ANGLES		±

WEIGHT 7.5 OZ MAX

REPLACES
RELEASE NO. SR 12879
CATALOG LISTING 1HE1-6 PAGE 1 OF 1
ISSUE 13
CHECK
REVISIONS
A 201060
CSL 5 SEP 00
CHECK 5 SEP 00
SAV
CHECK 5 SEP 00
DRAWN CSL
RASTER